SHANGHAI CIPHY INDUSTRY LTD.,CO.

DIN PN16/25 TRIPLE ECCENTRIC TYPE CARBON STEEL OR STAINLESS STEEL BUTTERFLY VALVE FLANGED ENDS

MODEL NO: SFDXRF-3PT-SSL

BUTTERFLY VALVE PRODUCT'S SIZE:

PRESSURE GRADE	FROM	TO
PN16	4"	36
PN25	4"	36

DESIGN DESCRIPTION:

* CAST STEEL BUTTERFLY VALVE PN16/25
* TRIPLE ECCENTRIC TYPE.
* MILTILAYER DISC SEAL IN PTFE/R-PTFE/NYLON
* AVAILABLE PTFE SEAL
* METAL SEAT FACING.
* CONNECTION: RF(RAISED FACE); RTJ (RING TYPE JOINT),LUG TYPE FLANGE

WORKING PRESSURE AND TEMPERATURE

WORKING TEMPERATURE	
MATERIAL	CELSIUR SCALE
CARBON STEEL	-29^{0}C~220^{0}C
STAINLESS STEEL	-40^{0}C~220^{0}C

GENERAL DESIGN SPECIFICATIONS:

ITEM	GERMANY STANDARD
MANUFACTURE	DIN 3202
PRESSURE-TEMPERATURE RATINGS	ANSI B16.34
FACE TO FACE	DIN 3202 K3
END FLANGE	DIN2543/2544
INSPECTION AND TEST	DIN3230

TEST PRESSURE TO DIN3230:

DIN	SHELL (WATER)	SEAT (WATER)	SEAT (AIR)
PN16	2.4MPA	2.64MPA	0.6MPA
PN25	3.6MPA	3.96MPA	0.6MPA

PARTS AND MATERIAL (ASTM)

NO.	PART NAME	MATERIAL
1	BODY	ASTM A216-WCB/A351-CF8/CF8M
2	COVER	ASTM A105/ENP/A182-F304/F316
3	SEAT RING	PTFE/R-PTFE/NYLON
4	DISC	ASTM A216-WCB/A351-CF8/CF8M
5	PIN	ASTM A276-410
6	STEM	ASTM A276-420
7	BUSHING	STEEL LINER PTFE
8	STEM PACKING	GRAPHITE
9	GLAND	A182-F6a/F304/F316
10	GLAND BOLT	A193-B7/B8/B8M
11	GLAND NUT	A194-2H/8/8M
12	YORK	ASTM A216-WCB/A351-CF8/CF8M
13	GEAR	DUCTILE IRON

OTHER MATERIALS ARE AVAILABLE UPON REQUEST.

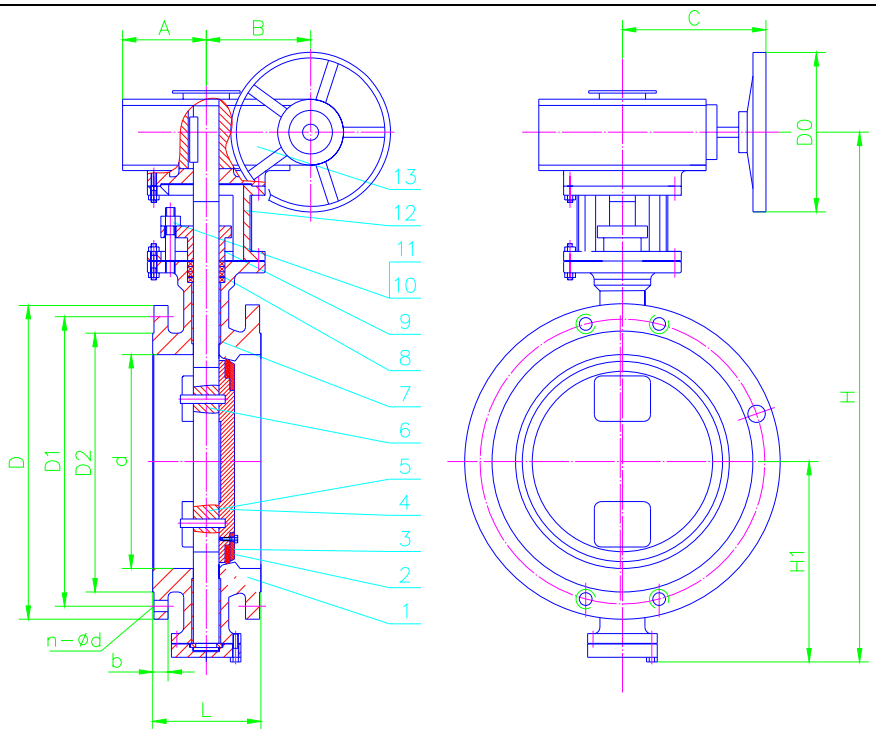

DIMENSIONS LIST (UNIT:MM):

mm	d	D	D1	D2	b	n-d	L	H	H1	A	B	C	DO
50	50	165	125	102	20	4-18	108	355	110	50	61	106	250
65	65	185	145	122	18	4-18	112	365	116	50	61	106	250
80	80	200	160	138	20	8-18	114	370	128	50	61	106	250
100	100	220	180	158	20	8-18	127	415	140	50	61	106	250
125	125	250	210	188	22	8-18	140	450	185	50	61	106	250
150	150	285	240	212	22	8-22	140	580	190	65	80	215	300
200	200	340	295	268	24	12-22	152	600	215	65	80	215	300
250	250	405	355	320	26	12-26	165	690	260	65	80	215	300
300	300	460	410	378	28	12-26	178	830	290	85	108	200	400
350	350	520	470	438	30	16-26	190	890	323	85	208	200	400
400	400	580	525	490	32	16-30	216	980	374	100	144	330	400
500	500	715	650	610	36	20-33	229	1130	415	160	220	250	500
600	600	840	770	725	40	20-36	267	1240	490	160	220	250	500
700	700	910	840	795	42	24-36	292	1430	530	230	220	270	500
800	800	1025	950	900	42	24-39	318	1545	670	230	220	270	500
900	900	1125	1050	1000	44	28-39	330	1920	710	290	279	515	500
1000	1000	1255	1170	1115	46	28-42	410	1950	740	290	279	515	500
1100	1100	1370	1280	1220	50	32-42	440	2230	815	290	279	515	500
1200	1200	1485	1390	1330	52	32-48	470	2350	850	290	279	515	500

*** We hereby reserve the rights of any alternative dimension that would help to improve our valve's quality and working efficiency**

SHANGHAI CIPHY INDUSTRY CO.,LTD
7G-1 Building, N0.515 Yishan Rd.
Shanghai, China
TEL:+86-21-5497 5962
FAX:+86-21-5497 5963
HTTP://WWW.CIPHY.CN
CIPHY@CIPHY.COM
COPYRIGHT©2004-[CIPHY]
ALL RIGHTS RESERVED.