CARBON STEEL OR STAINLESS STEEL 3-PC BALL VALVE THREADED CAP DESIGN

DESIGN DESCRIPTION:

- *Design: BS5351;*
- *Manufacture: BS5351;*
- *Thread: ANSI B1.20.1, BSP(T), DIN2999;*
- *Socket: ANSI B16.11*
- *Test: API598;*
- *3-PC Body, Class 800/1500;*
- *Floating Ball, Bolt Cover;*
- *Full Bore Or Standard Port, Soft seal;*
- *Material and Working Temp.:*
  - *PTFE&R-PTFE: 0 ℃-200 ℃(32 ℉-392 ℉)*
  - *PPL: 300 ℃(572°F) Maximum*
  - *PEEK: 260 ℃(500°F) Maximum*

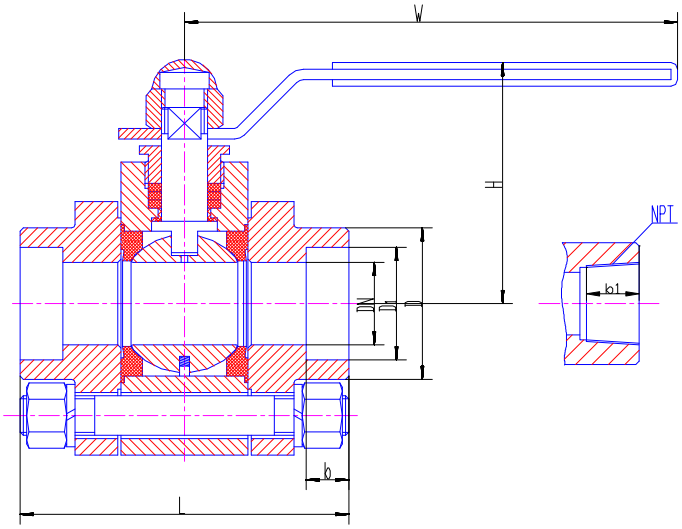

PARTS AND MATERIAL:

PARTS NAME	MATERIALS
CAP	ASTM A105/LF2/F304/F316/F304L/F316L
GASKET	GRAPHITE+304/GRAPHITE+316
BODY	ASTM A105/LF2/F304/F316/F304L/F316L
SEAT	R-PTFE/PPL/PEEK
BALL	ASTM A105+ENP/F304/F316/F304L/F316L
STEM	ASTM A182 F6/F304/F316/F304L/F316L
STEM PACKING	PTFE
STOP PLATE	CARBON STEEL
HANDLE	STEEL+PLASTIC
NUT	ASTM A194 2H/ A194 B8

OTHER MATERIALS ARE AVAILABLE UPON REQUEST.

DIMENSIONS LIST(UNIT:MM):

DN	SIZE	d	D	D1	b	NPT	L	b1	H	W
Class 600/800 STANDARD PORT										
15	1/2”	10	32	21.8	9.5	1/2”	72	15	42	100
20	3/4”	15	37	27.4	13	3/4”	86	15	60	125
25	1”	19	46	34.2	13	1”	100	19	75	140
40	1-1/2”	23	64	48.9	13	1-1/2”	130	25	73	150
50	2”	38	86	61.4	16	2”	166	30	125	250
Class 600/800 FULL PORT										
15	1/2”	15	32	21.8	9.5	1/2”	72	15	60	125
20	3/4”	19	37	27.4	13	3/4”	86	15	75	140
25	1”	23	46	34.2	13	1”	100	19	73	150
40	1-1/2”	38	64	48.9	13	1-1/2”	130	25	125	250
50	2”	51	86	61.4	16	2”	166	30	162	350
Class 900/1500										
15	1/2”	14	36	22	10	1/2”	130		90	180
20	3/4”	19	42	27.3	13	3/4”	140		95	200
25	1”	25	50	34	13	1”	150		106	220
32	1-1/4”	32	58	42.8	13	1-1/4”	180		115	250
40	1-1/2”	38	70	48.9	13	1-1/2”	200		125	250
50	2"	51	86	61.4	16	2"	250		150	350

Remark: Our design can be suitable for all standard (BS, DIN, ANSI, JIS standard etc.)

✧ *We hereby reserve the rights of any alternative dimension that would help to improve our valve's quality and working efficiency.*